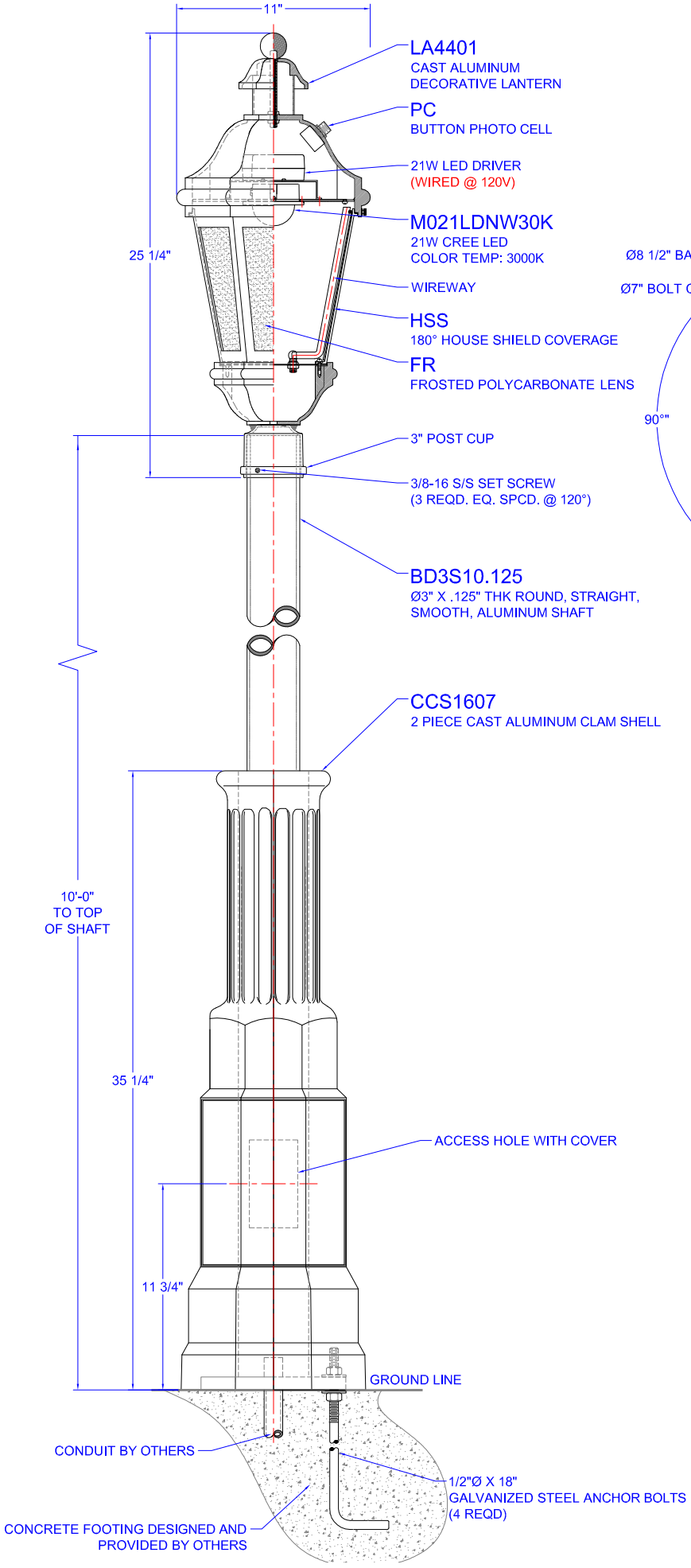

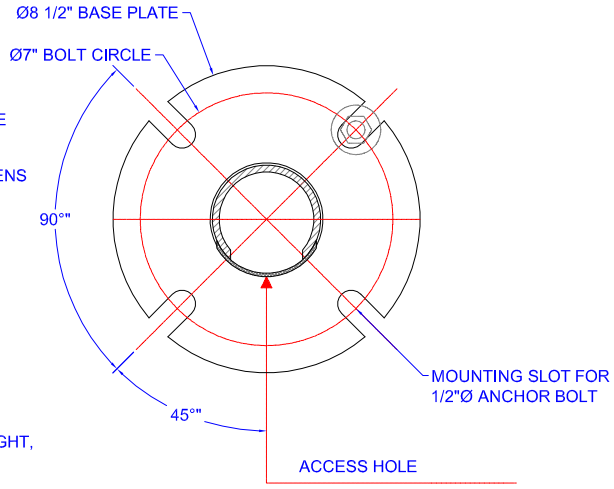

MOUNTING DETAIL

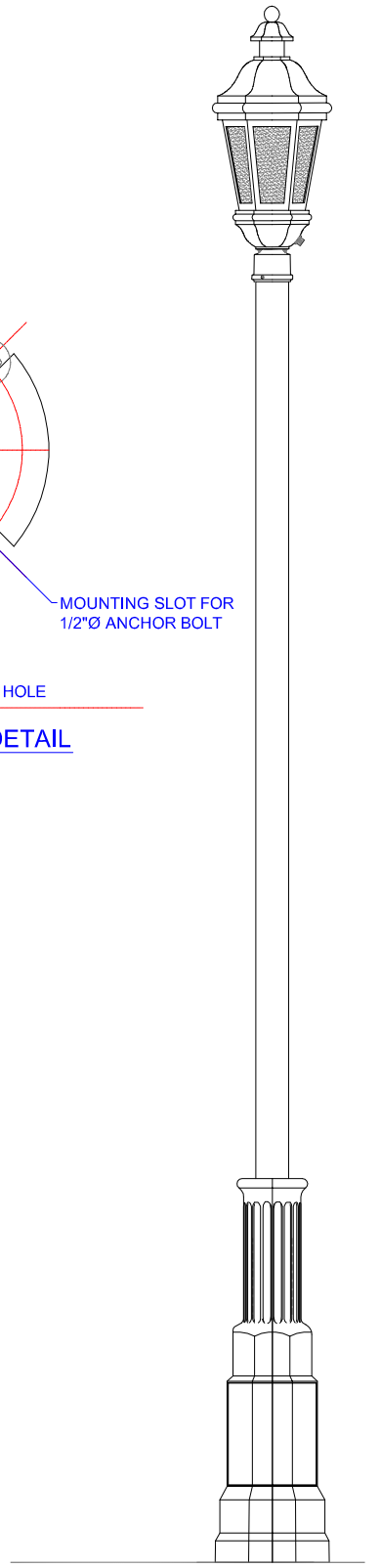

PROPORTIONAL VIEW

*UL LISTED