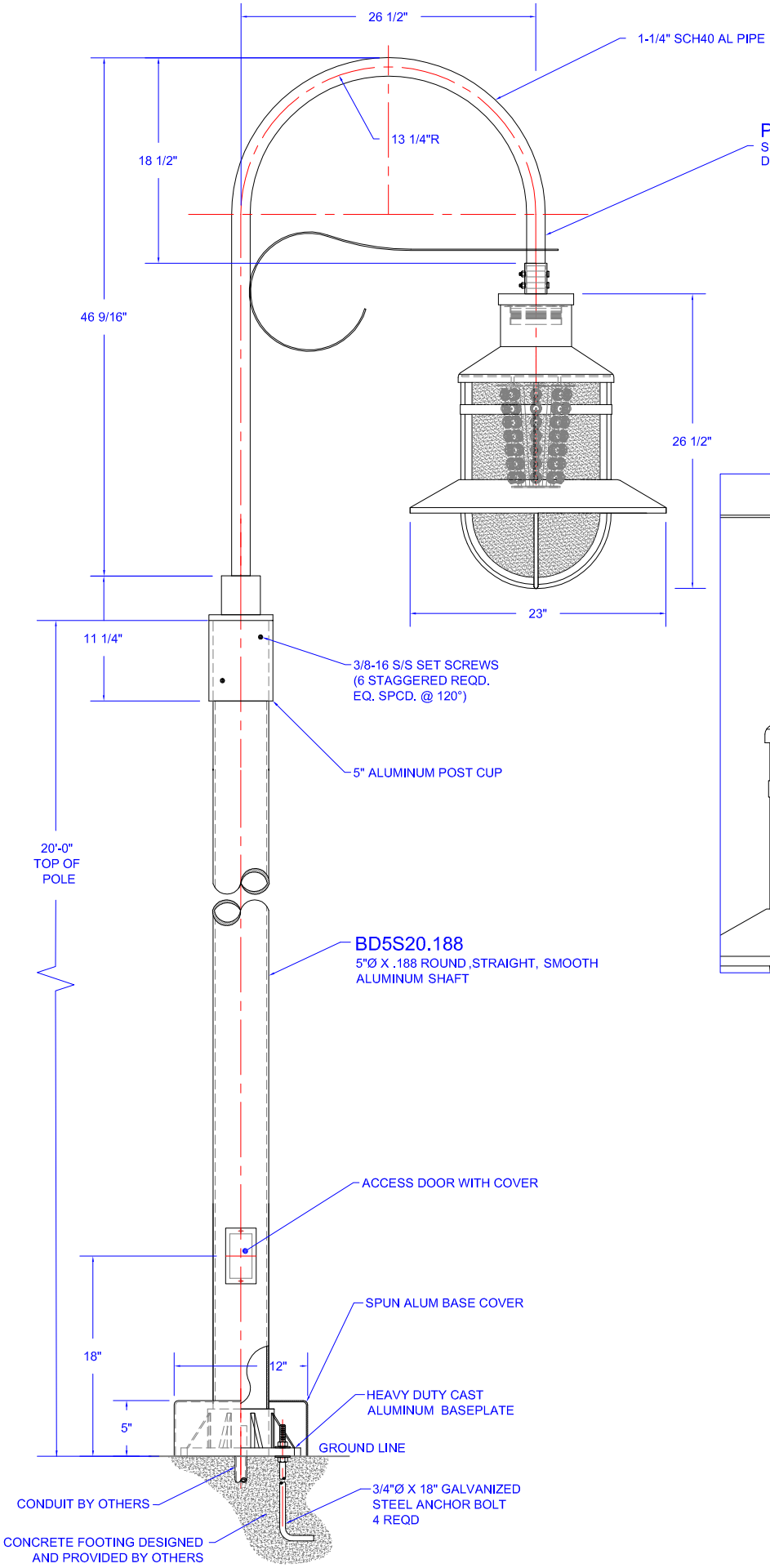

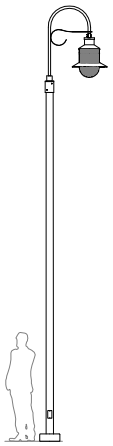

PROPORTIONAL VIEW

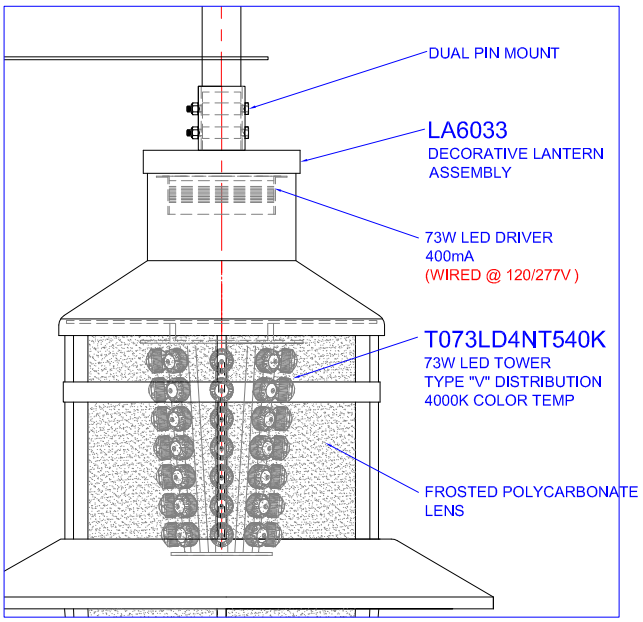

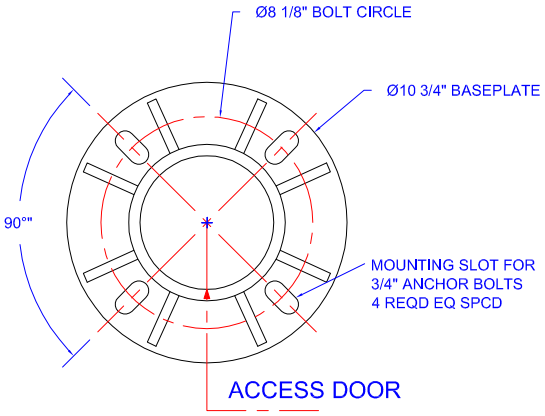

MOUNTING DETAIL

*UL LISTED