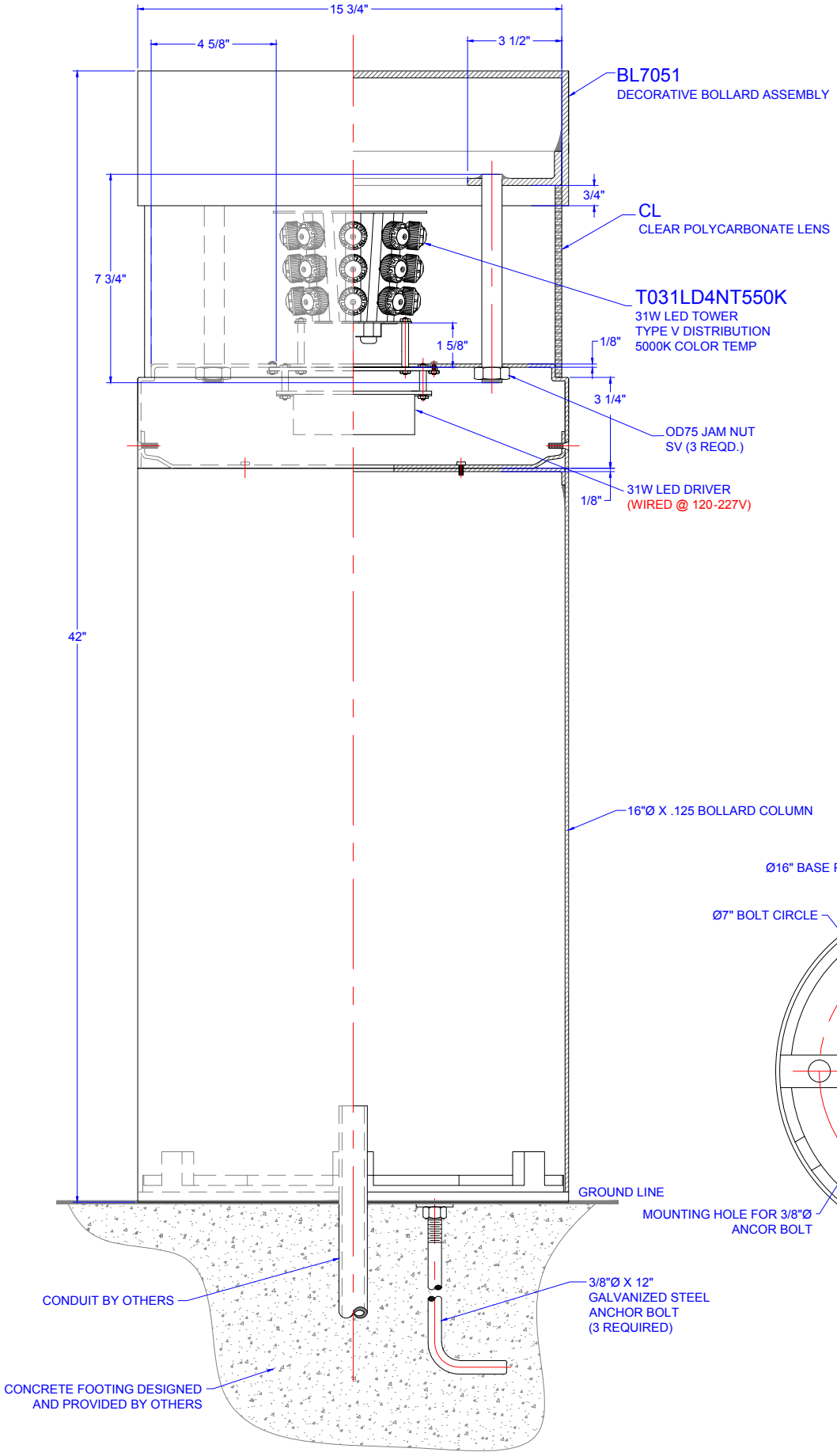

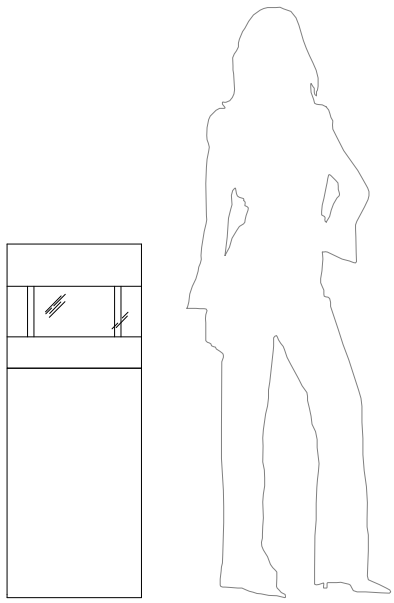

PROPORTIONAL VIEW

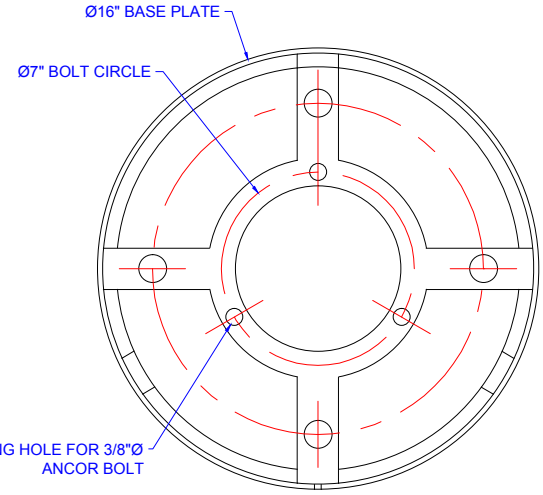

MOUNTING DETAIL